Assembly instructions

Vetva Shelf

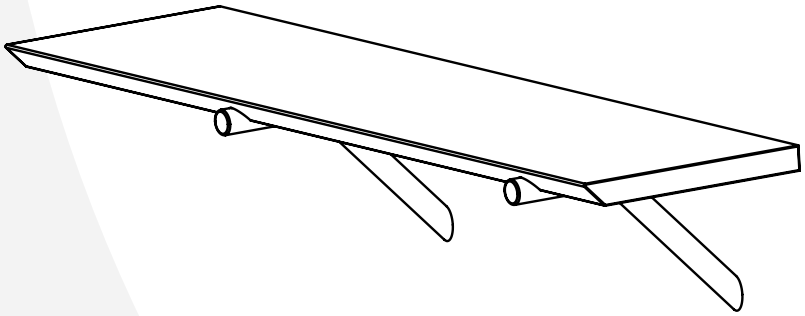

EN: User instructions

- before starting assembly, carefully read all instructions in this manual
- use caution when assembling
- check that all parts are included in the package

Warnings

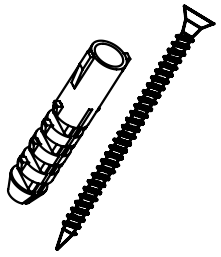

Due to variations in wall and sealing materials, raw plugs and screws for wall fixation and sealing are **not included**. It is imperative to ensure that the chosen fastening method is appropriate and secure for your specific home setup.

Tools, fittings and products parts

Tools overview

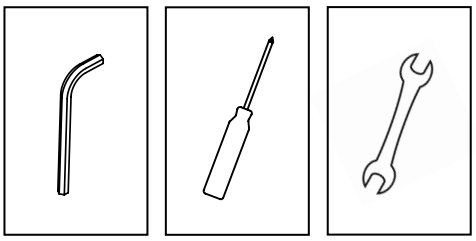

Fittings and product parts

A x 1

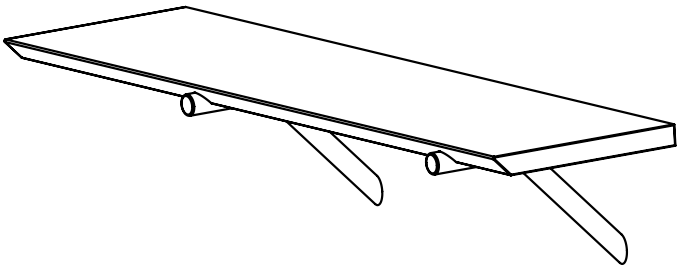

B

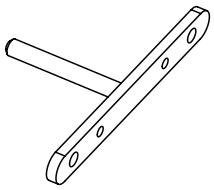

C

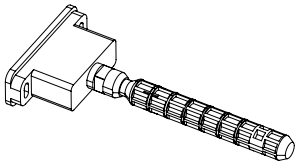

D

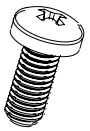

M5 x 12

E

Specification

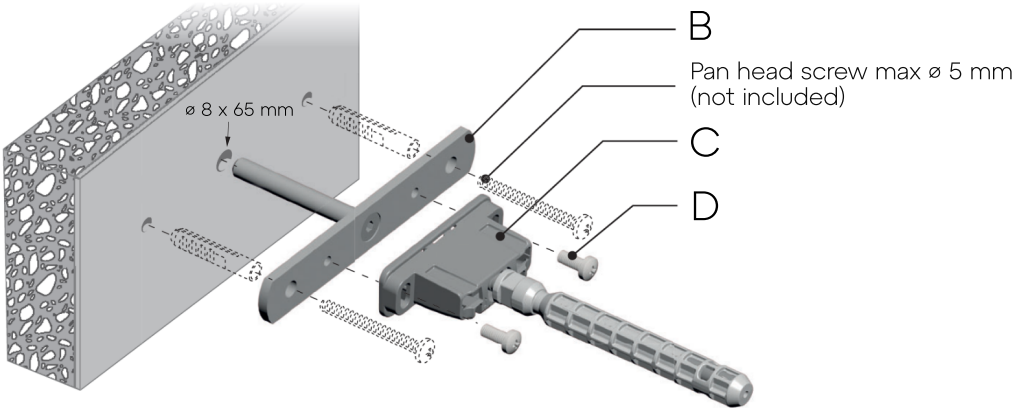

Wall plugs and screws for wall fixation are not included.

It is the responsibility of the customer to ensure that the wall is suitablefor holding the shelf fixings in place and to use the appropriate hardware fittings according to the construction of the wall.

Step 1

Mark the drilling positions on the wall. Then, drill the holes and insert wall plugs (not included).

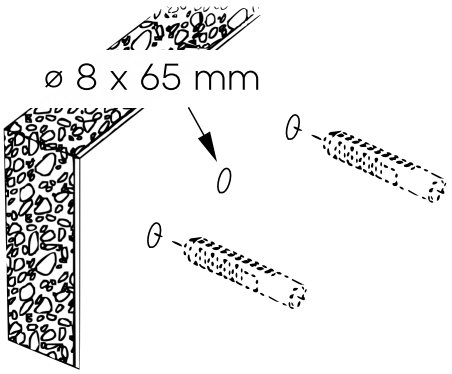

Step 2

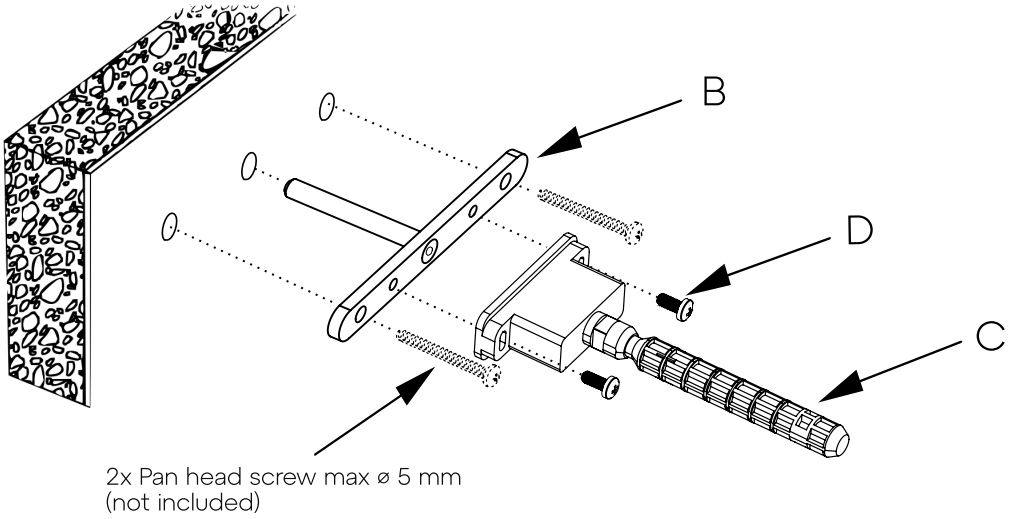

Step 3

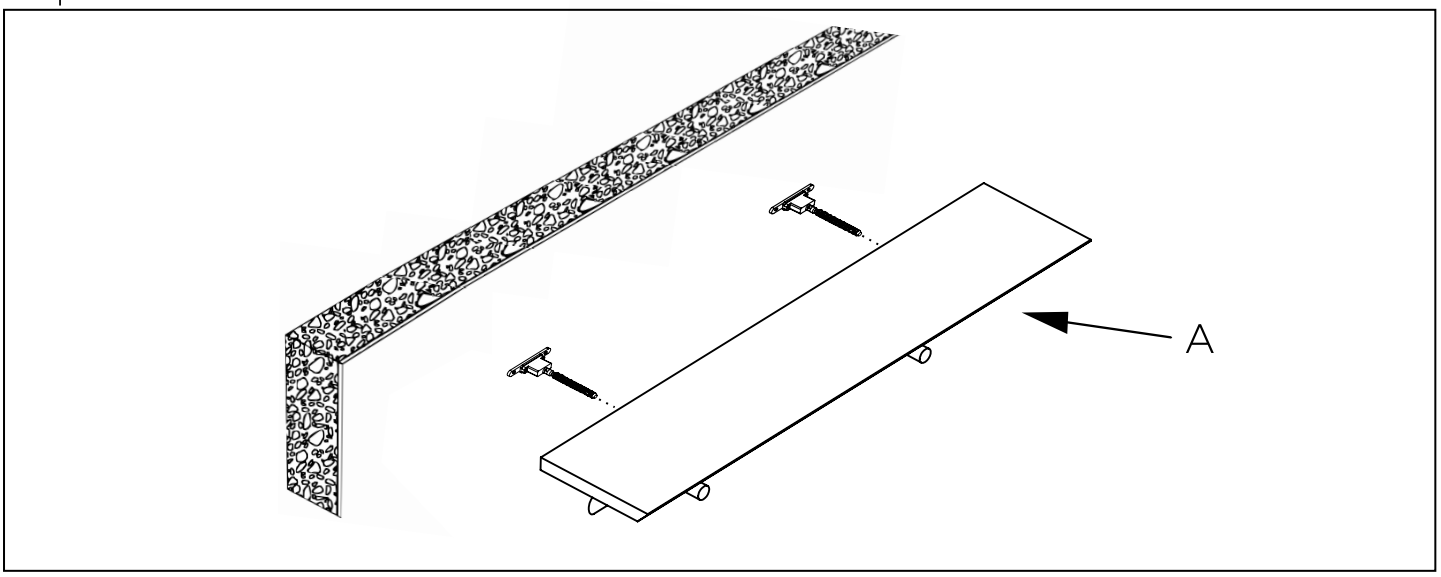

Step 4

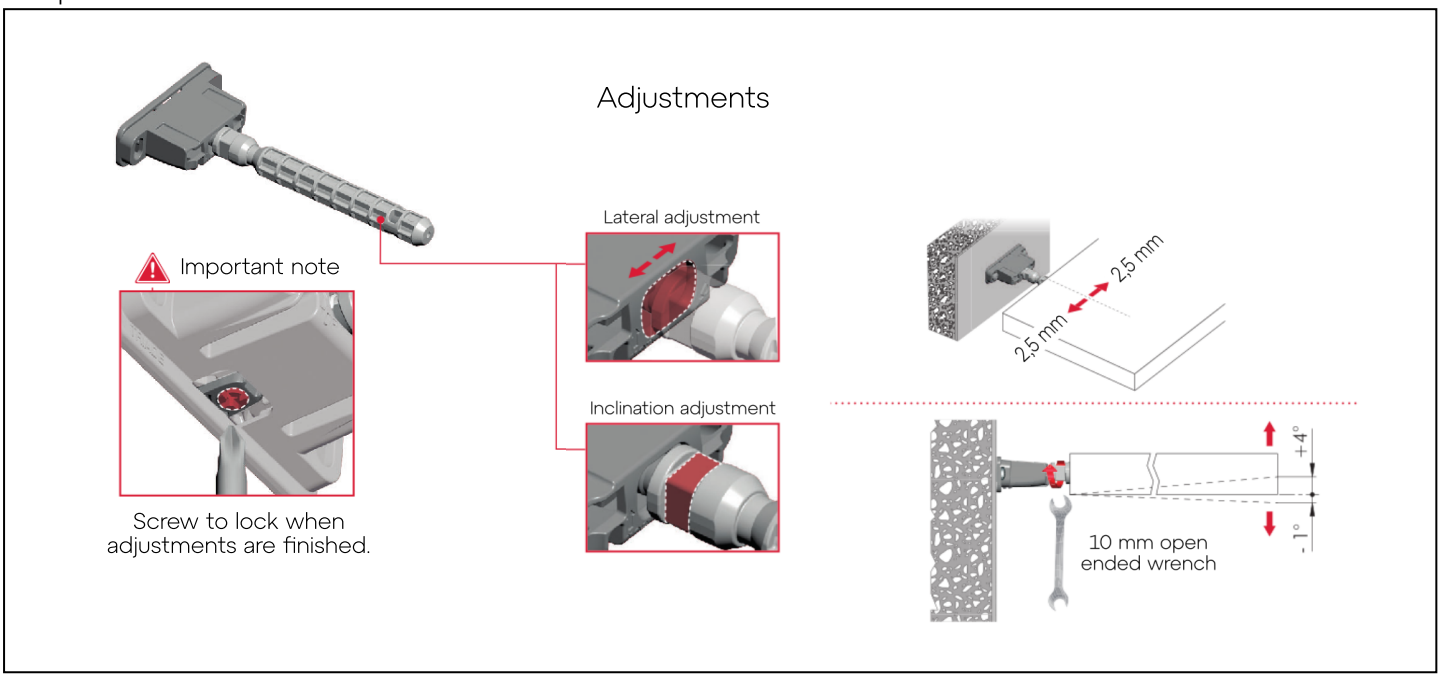
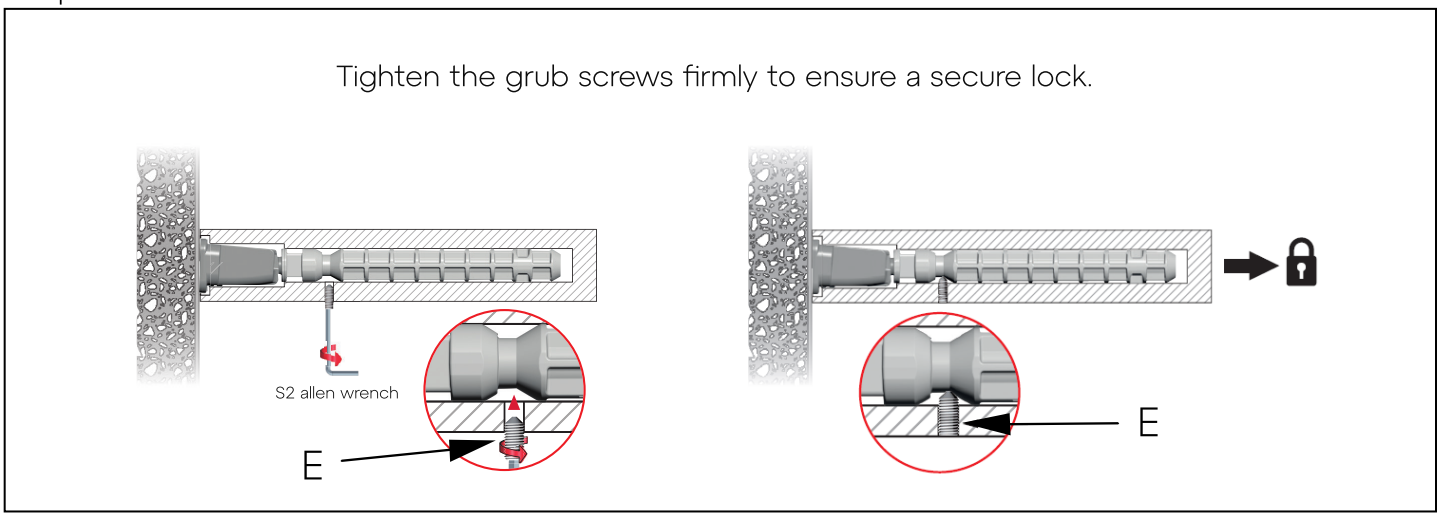
Step 5